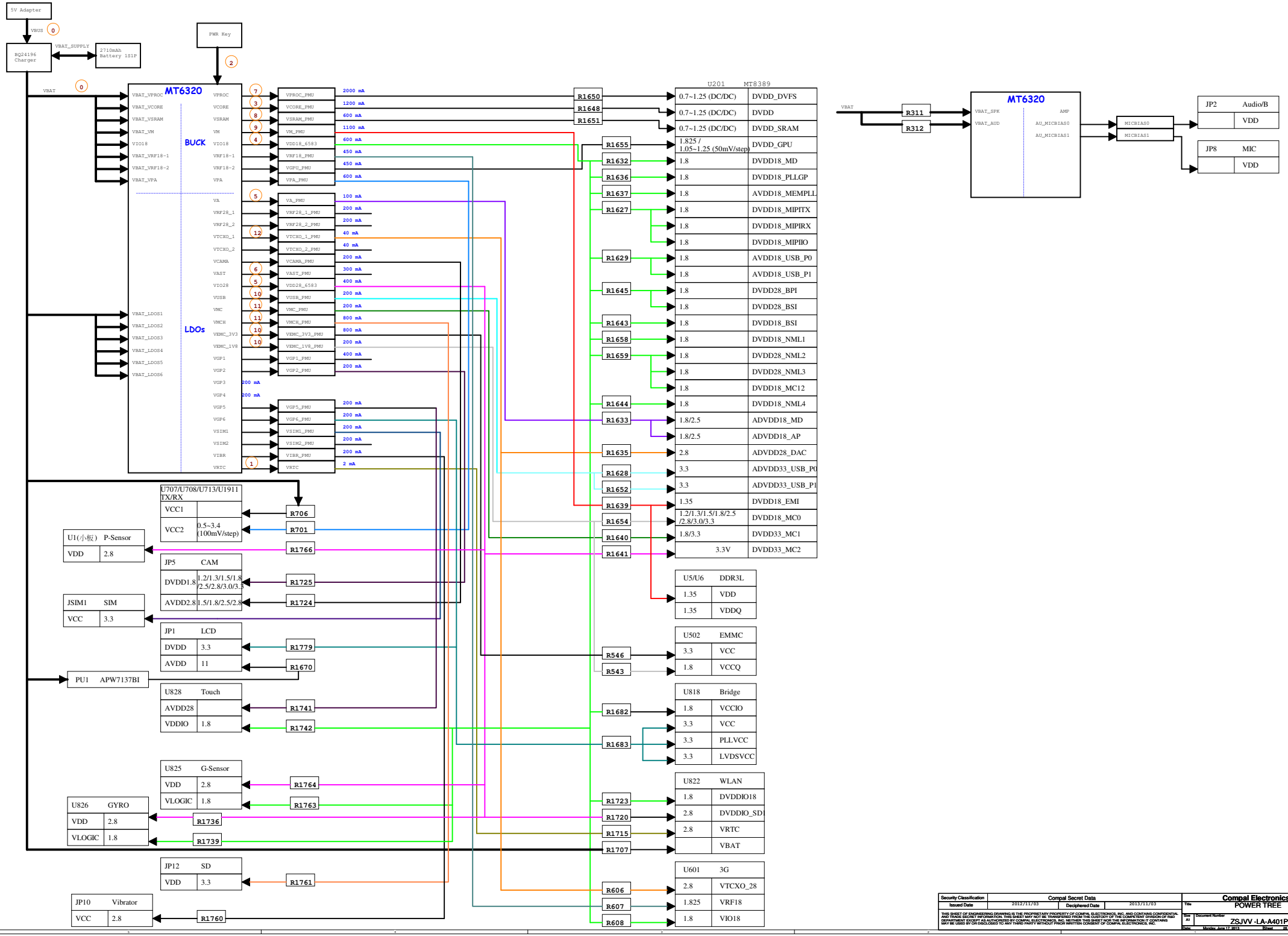

Security Classification	Compal Secret Data			Compal Electronics, Inc.
Issued Date	2012/11/03	Deciphered Date	2013/11/03	Title POWER TREE

THIS SHEET OF ENGINEERING DRAWING IS THE PROPRIETARY PROPERTY OF COMPAL ELECTRONICS, INC. AND CONTAINS CONFIDENTIAL AND TRADE SECRET INFORMATION. THIS SHEET MAY NOT BE TRANSFERRED FROM THE CUSTODY OF THE COMPETENT DIVISION OF R&D DEPARTMENT EXCEPT AS AUTHORIZED BY COMPAL ELECTRONICS, INC. NEITHER THIS SHEET NOR THE INFORMATION IT CONTAINS MAY BE USED BY OR DISCLOSED TO ANY THIRD PARTY WITHOUT PRIOR WRITTEN CONSENT OF COMPAL ELECTRONICS, INC.

Size	Document Number	Rev
A1	ZSJVV -LA-A401P	0.1

Date: Monday, June 17, 2013 Sheet 28 of 28