J30 POWER SYSTEM ARCHITECTURE

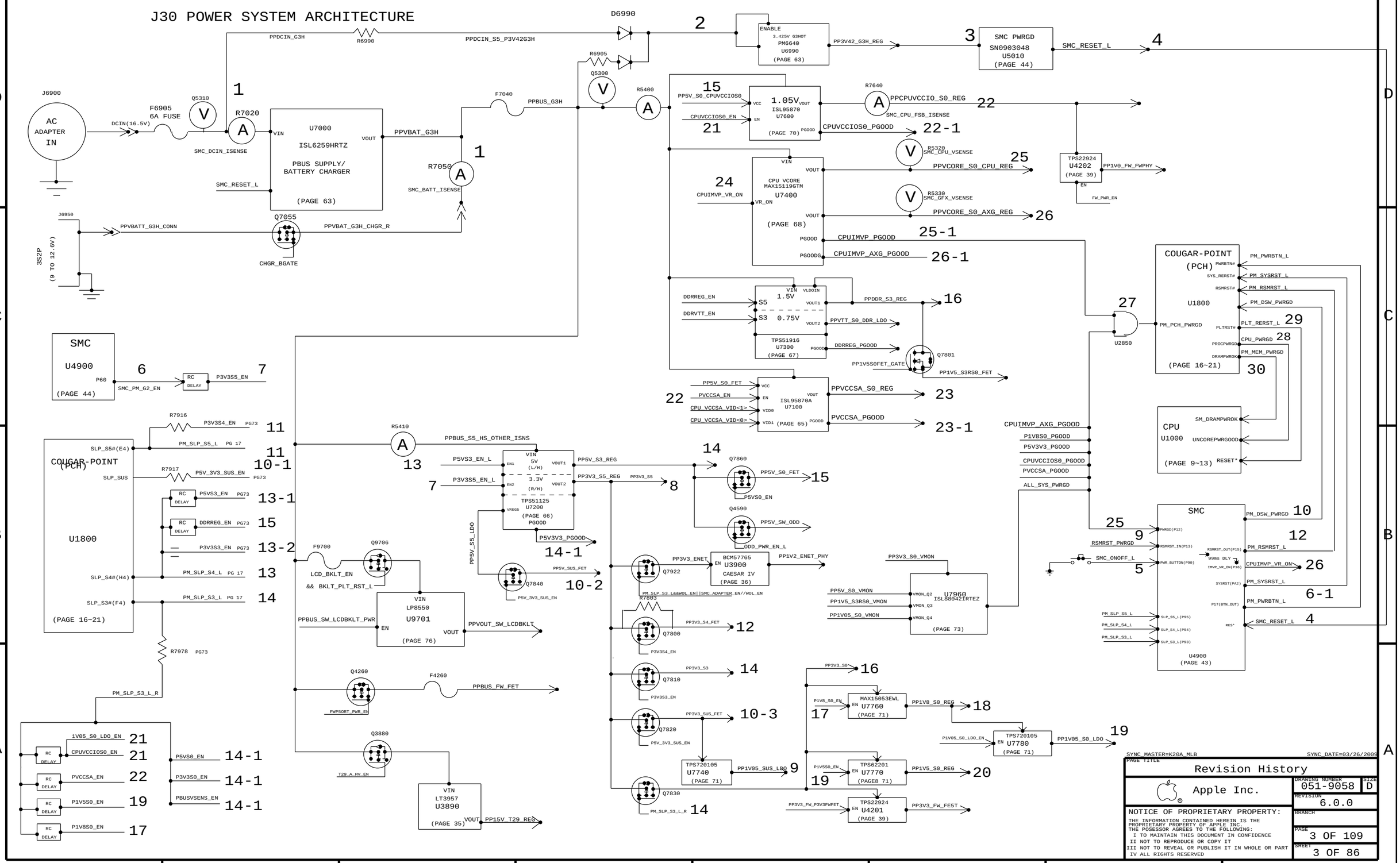

SYNC_MASTER=K20A_MLB SYNC_DATE=03/26/2009

PAGE TITLE
Revision History

Apple Inc.

DRAWING NUMBER 051-9058 SIZE D
REVISION 6.0.0
BRANCH
PAGE 3 OF 109
SHEET 3 OF 86

NOTICE OF PROPRIETARY PROPERTY:
THE INFORMATION CONTAINED HEREIN IS THE PROPRIETARY PROPERTY OF APPLE INC.
THE POSESSOR AGREES TO THE FOLLOWING:
I TO MAINTAIN THIS DOCUMENT IN CONFIDENCE
II NOT TO REPRODUCE OR COPY IT
III NOT TO REVEAL OR PUBLISH IT IN WHOLE OR PART
IV ALL RIGHTS RESERVED