J11 POWER SYSTEM ARCHITECTURE

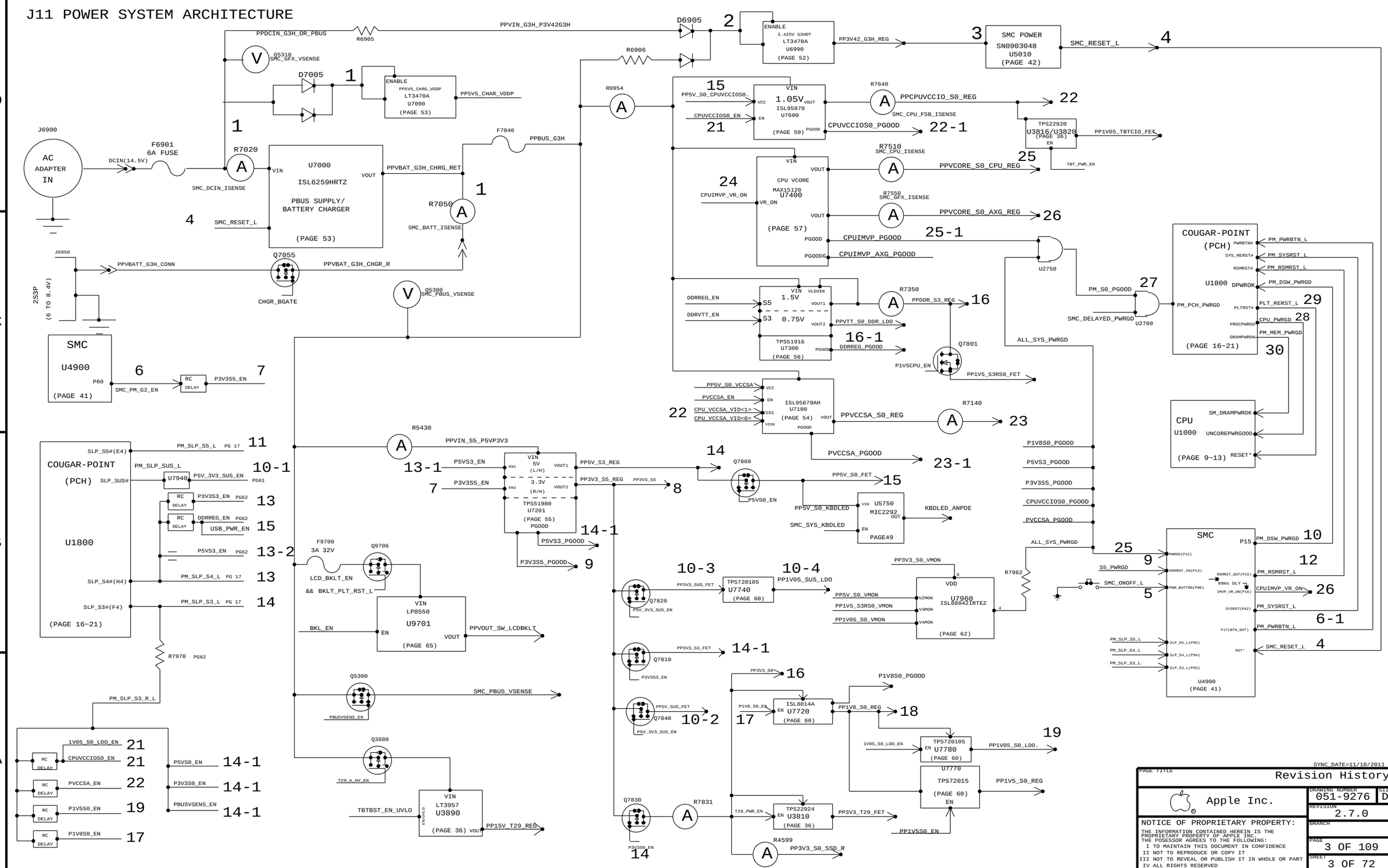

SYNC_DATE=11/18/2011

PAGE TITLE: Revision History

Apple Inc.

DRAWING NUMBER: 051-9276 | SIZE: D

REVISION: 2.7.0

BRANCH:

PAGE: 3 OF 109

SHEET: 3 OF 72

NOTICE OF PROPRIETARY PROPERTY:
THE INFORMATION CONTAINED HEREIN IS THE PROPRIETARY PROPERTY OF APPLE INC.
THE POSESSOR AGREES TO THE FOLLOWING:
I TO MAINTAIN THIS DOCUMENT IN CONFIDENCE
II NOT TO REPRODUCE OR COPY IT
III NOT TO REVEAL OR PUBLISH IT IN WHOLE OR PART
IV ALL RIGHTS RESERVED