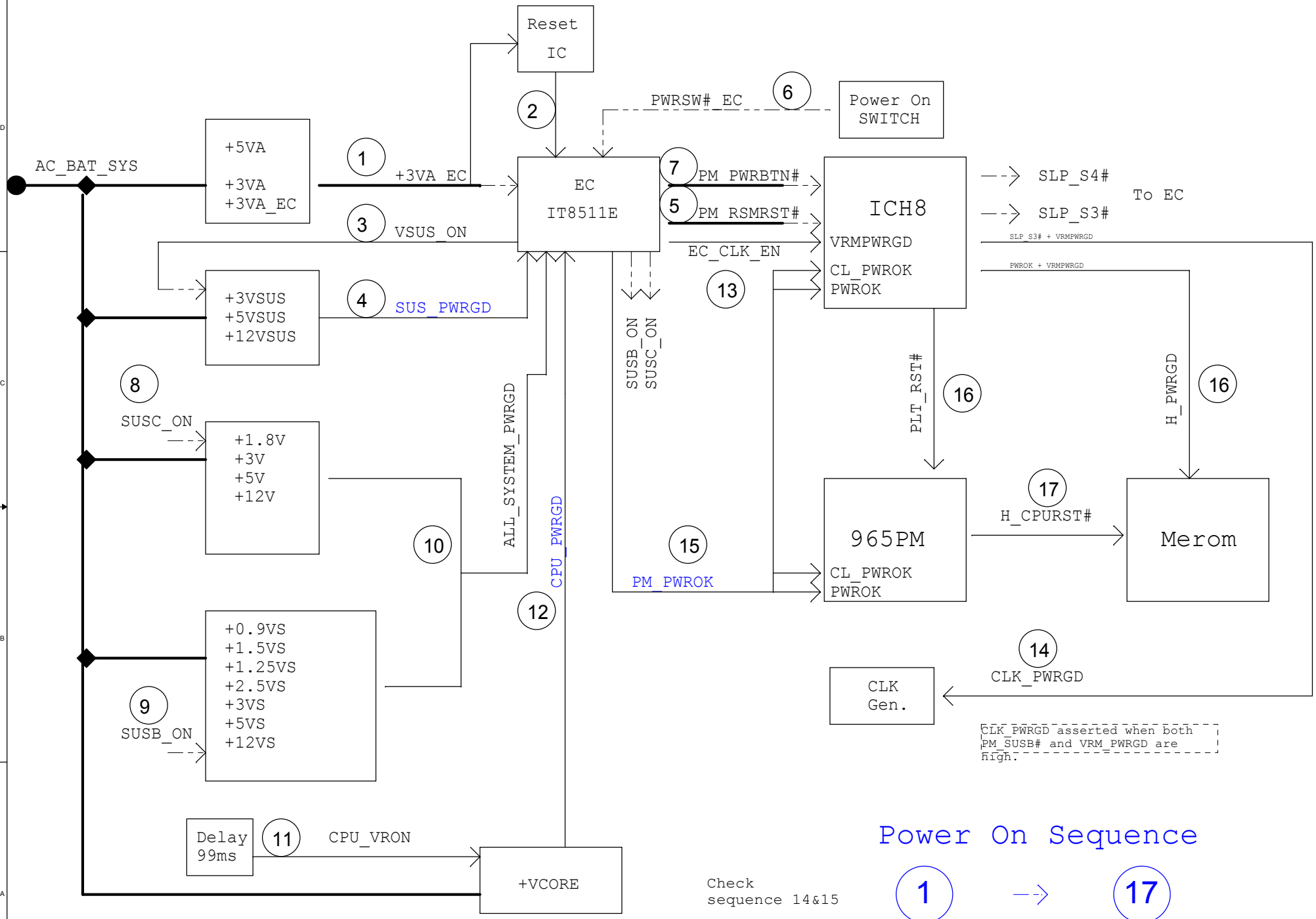

Power On Sequence

ASUSTeK COMPUTER INC	Title : PowerOn sequence
	Engineer:
Size: Custom	Project Name: A8ES
Rev: 2.1	
Date: Thursday, March 29, 2007	Sheet 2 of 94

GRATIS - FREE